# MODEL NTF30

Installation instructions for
stainless steel farmhouse sinks



## Features

- Minimum cabinet side 30-inch.
- Single large bowl.
- 9" (228 mm) depth provides generous workspace.
- No faucet holes.
- **Self-Trimming apron** overlaps the cabinet face for easy installation.
- Rear drain increases workspace in the sink and storage space underneath.
- Includes strainer and cutting board.

## Installation

- Under-mount farmhouse.

**Empire Industries inc.**
40 Warren Street, Paterson, NJ 07524
1 (800) 631-0223
info@empire-industries.com

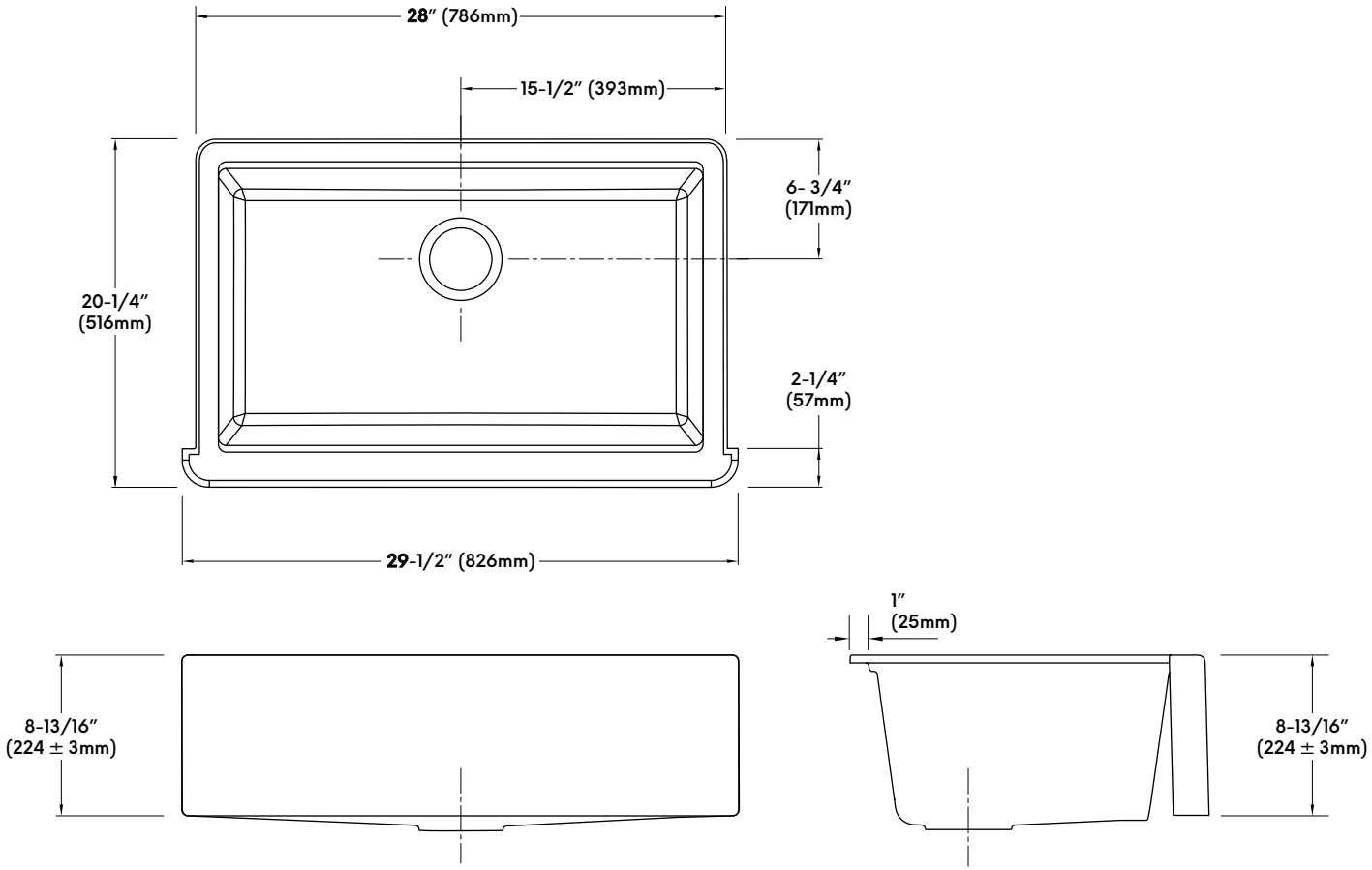


## Technical Information

All product dimensions are nominal.

| | |
|---|---|
| Installation: | Under-mount |
| Min. base cabinet width: | 30" (839 mm) |
| Drain hole: | 3-1/2" (91 ± 2mm) |

## Notes

Install this product according to the installation instructions.

## Tools and Materials

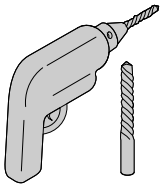
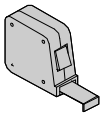
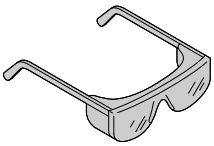
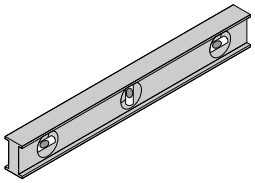
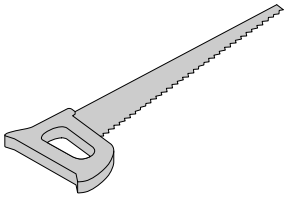
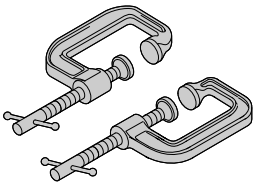
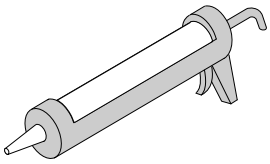

Construction Adhesive



Painter's Tape

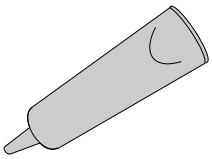

Silicone Sealant

## Plus:

- Suitable support framing material [3/4" (19 mm)] max thickness
- Screws

## Before You Begin

**IMPORTANT!** Refer to the "Roughing-In" section for cabinet dimensional requirements.

**IMPORTANT!** This sink must be installed prior to the installation of the countertop. Cut-line is based from the front face of the cabinet.

**IMPORTANT!** Long screws may damage adjacent cabinets. Ensure the screws are long enough to secure the support framing, but short enough not to extend through the walls of adjacent cabinets.

- Due to the nature of under-mount installations, Empire recommends that under-mount sink installations be performed by trained and experienced installers.
- Use proper fasteners to ensure the frame will support a minimum of 300 lbs (136 kg). Locate the fasteners for easy access in the event the sink needs to be removed.
- Observe all local plumbing and building codes.

Ensure clearance for
faucet installation.

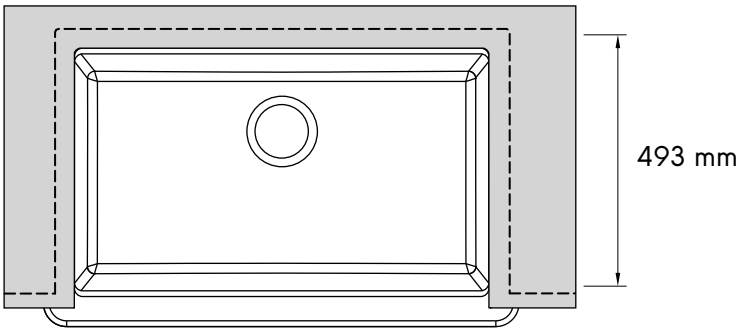


# 1

**IMPORTANT!** Before installing this sink, verify that measurement **A is greater than 9 1/4" (232 mm).**

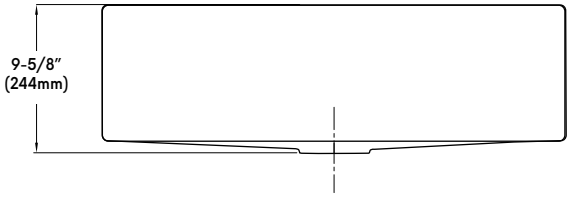


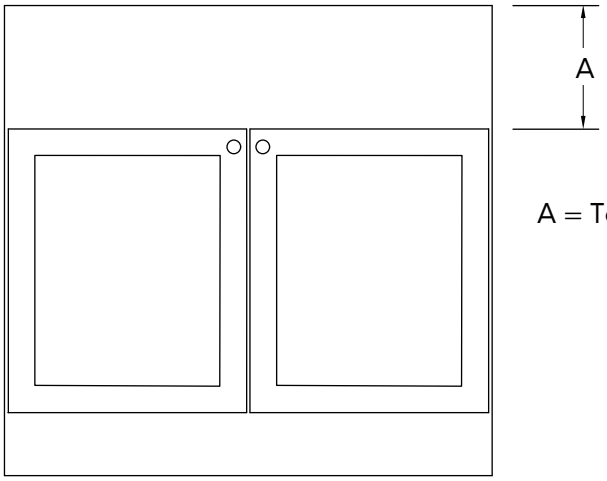


A = Top of Cabinet to Top of Doors

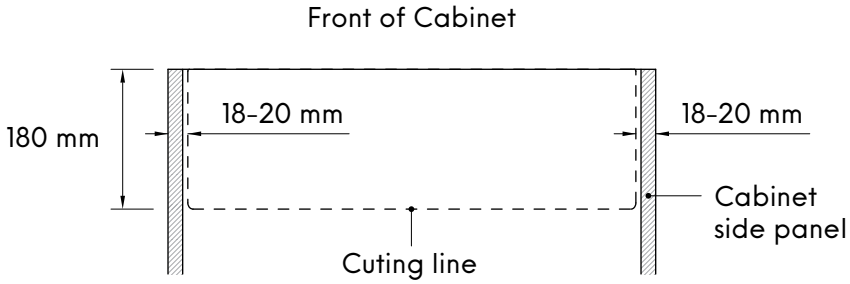


# 2

Mark a line 18-20 mm from the end of the cabinet and 180 mm = 7" put painter tape along this line and cut it out.

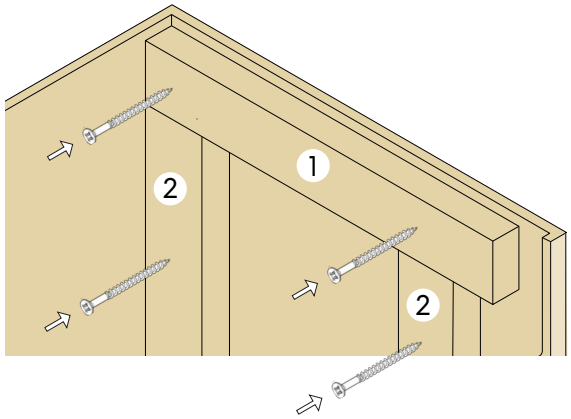


# 3

Mark a horizontal line 13 mm below the top of the cabinet, apply glue and connect the 1" framing support as shown. Set the sink over the support and make sure the top of the rim is slightly below the top of the cabinets than remove the sinks. Install 2 vertical support (2) under the horizontal frame (1).

**TIP!** Use clamps to hold horizontal frame (1) in position.

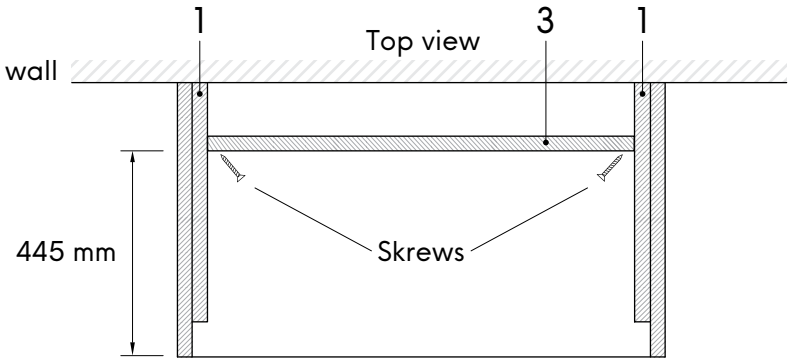


# 4

Mark a line 445 mm from the front of the cabinet and install horizontal support (3). Please use glue and clamps before screwing it to the side supporting blocks.

**TIP!** Use clamps to hold the horizontal frame (3) in position.

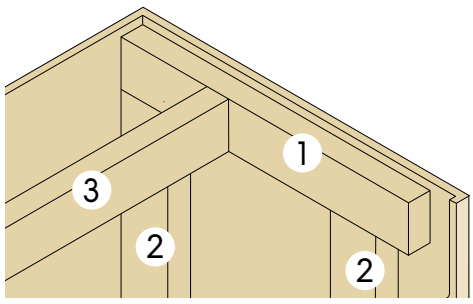


Final look of the support frame

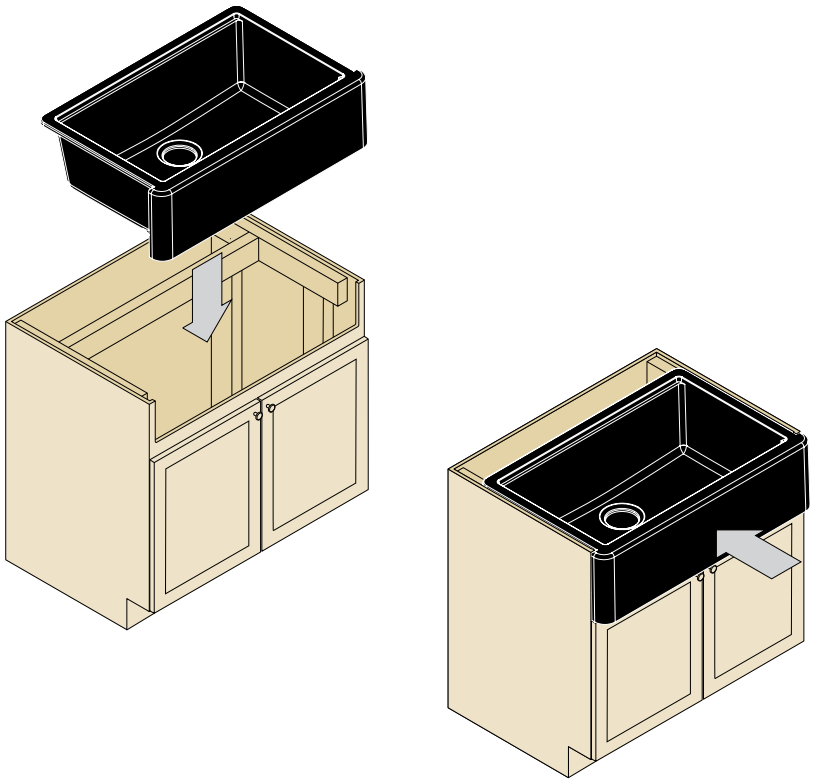

# 5

Lay the sink over the horizontal frame of the cabinet and push the sink to the back so the front apron touches the front of the cabinet and the back ledge is resting on #3. Make sure its fit and level before you apply the silicon.

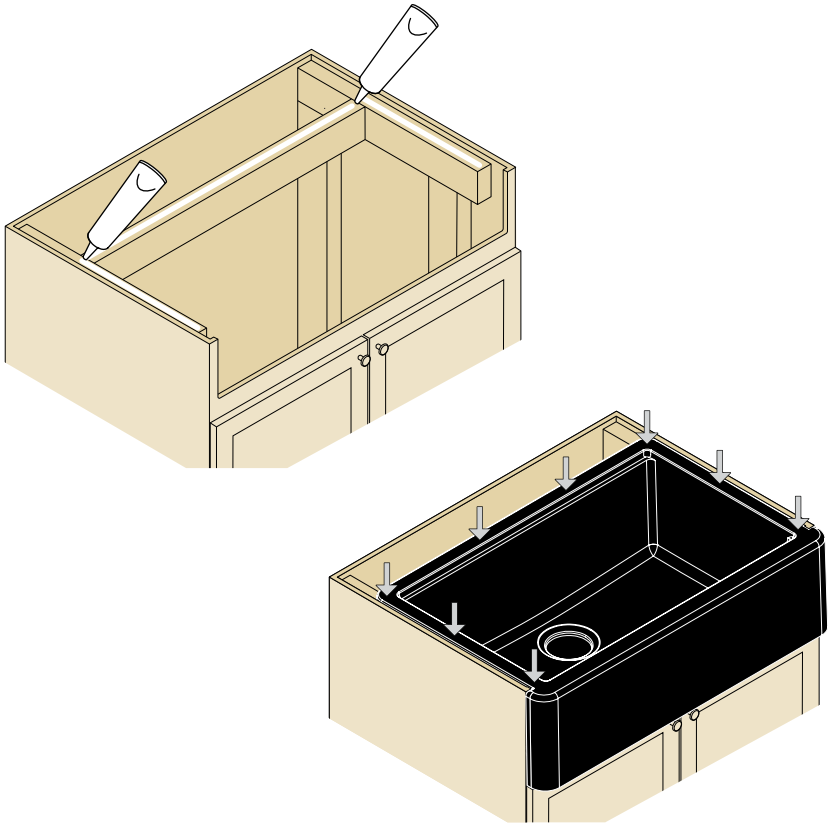

# 6

Apply a bead of silicone sealant on top of the side supports and back support. Than lay the sink on and press down make sure that it is level if needed shim it with thin wood. Wipe any excess of silicon.
And you're done!