DAYTONA 2 FOR TRIBECA 24-20

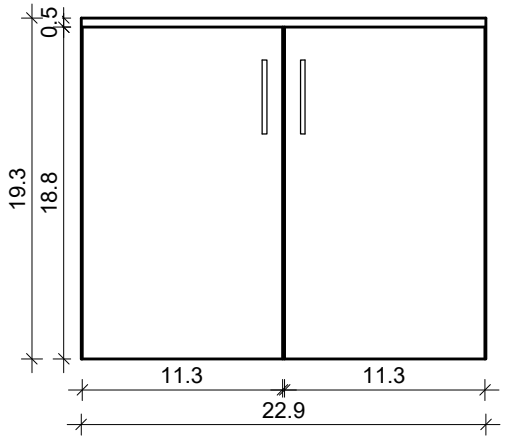

FRONT VIEW

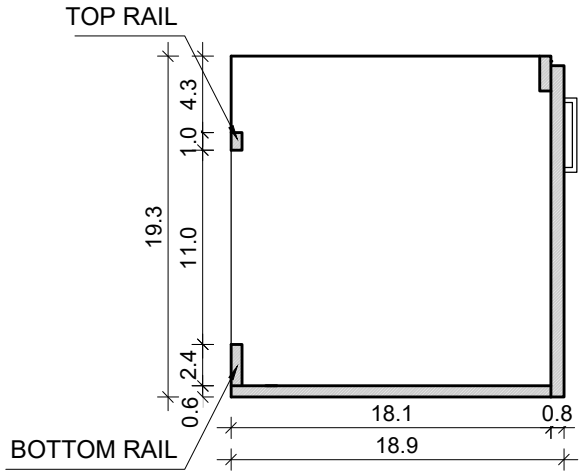

SIDE VIEW

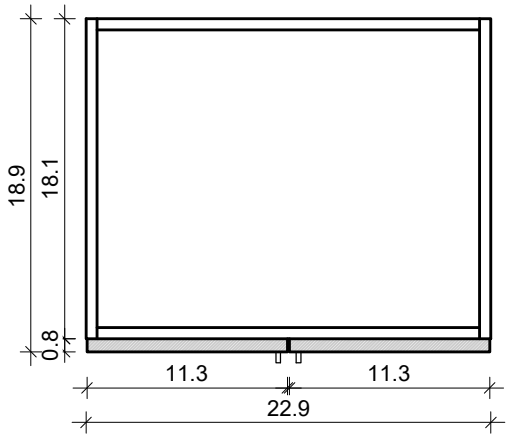

TOP VIEW

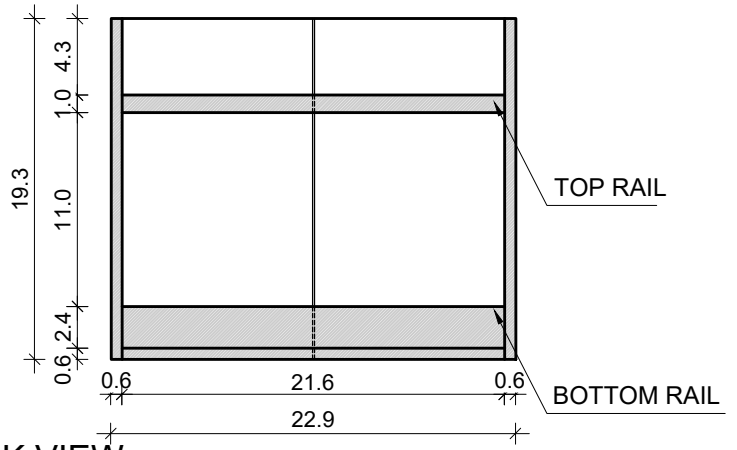

BACK VIEW