DAYTONA 2 FOR NEW KIRA 24-02

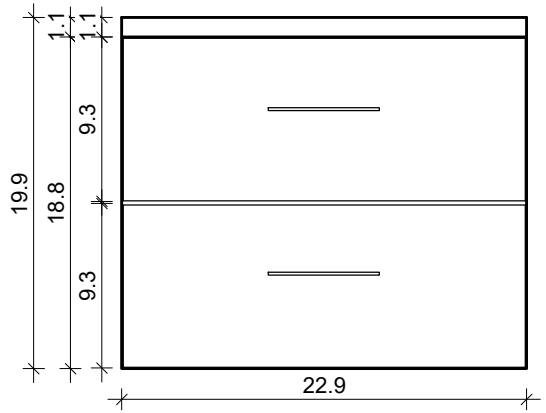

FRONT VIEW

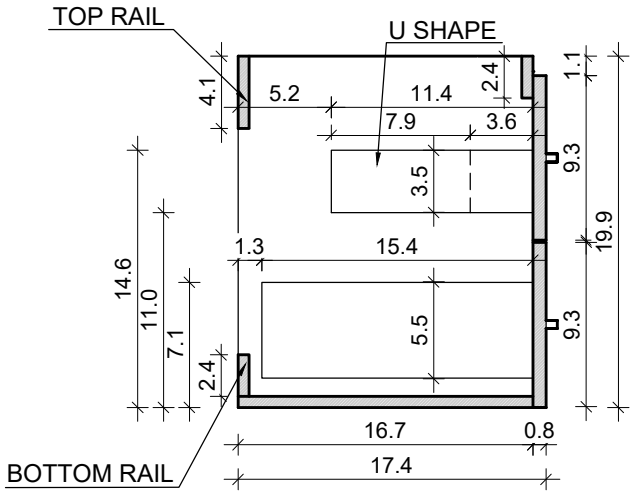

SIDE VIEW

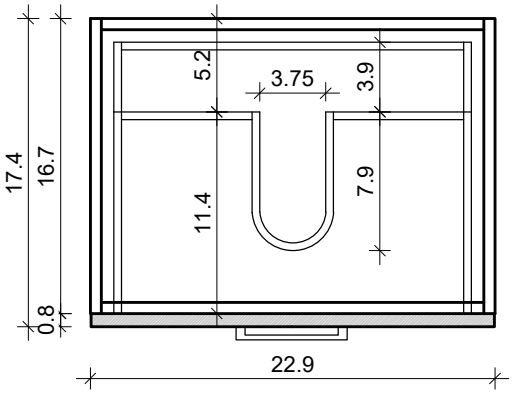

TOP VIEW

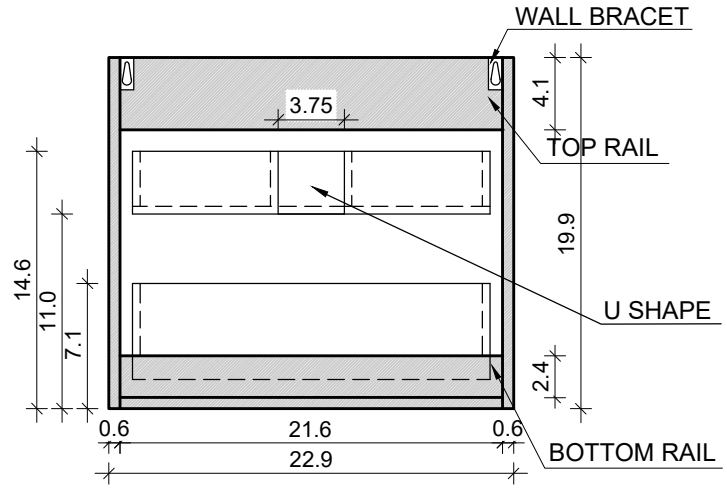

BACK VIEW