DAYTONA 2 FOR NEW CITY 18-20

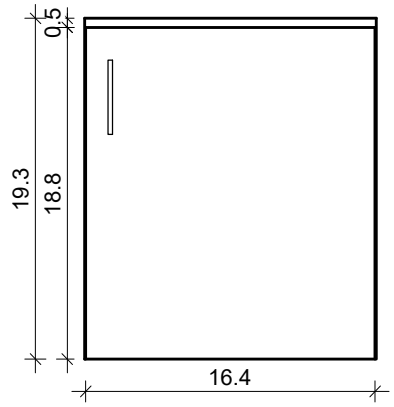

FRONT VIEW

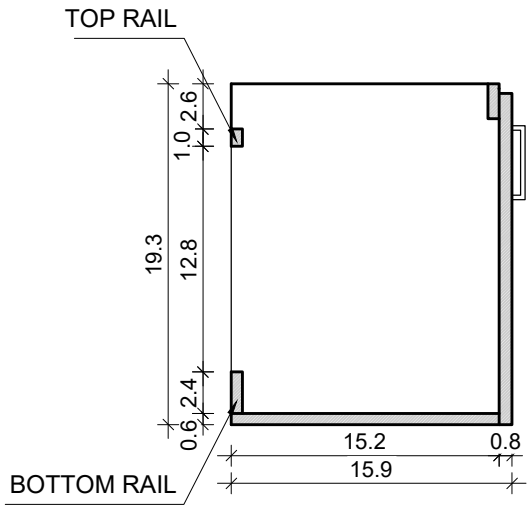

SIDE VIEW

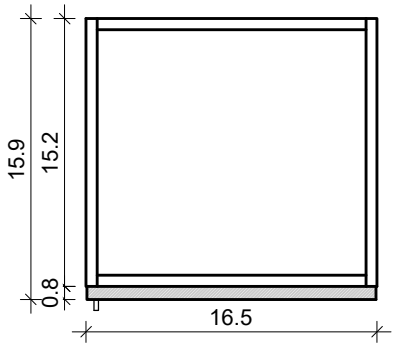

TOP VIEW

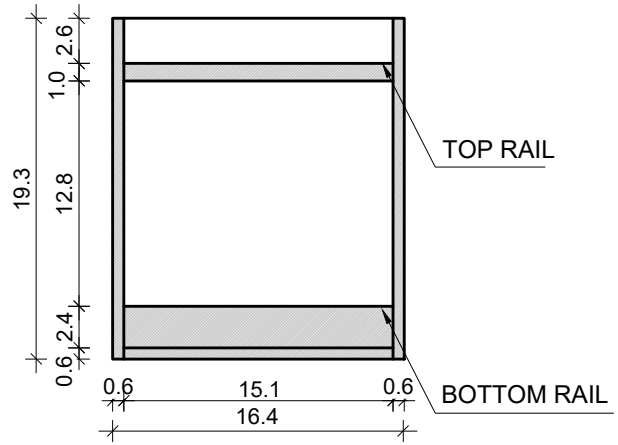

BACK VIEW