DAYTONA 2 STONE 24-02

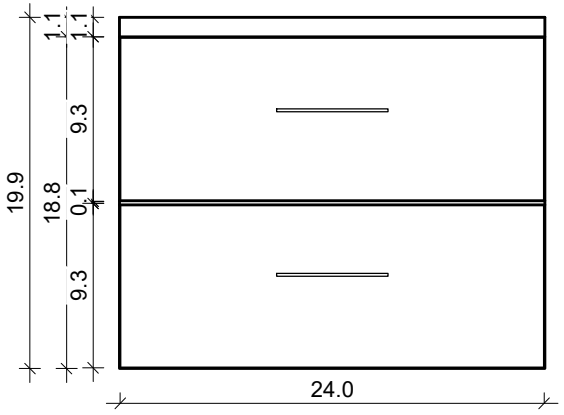

FRONT VIEW

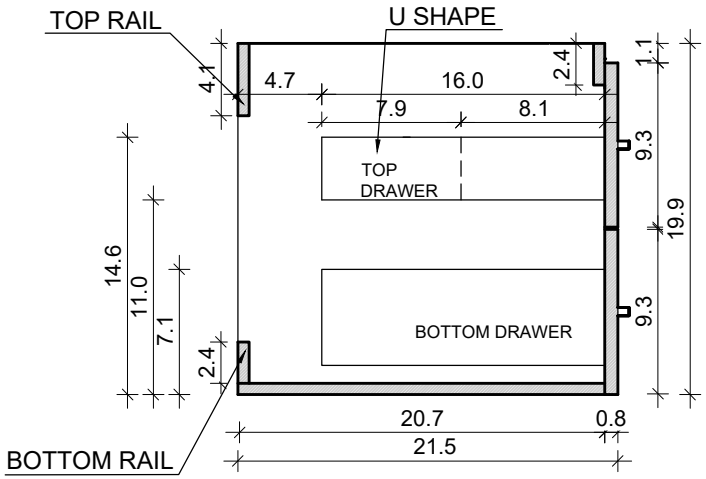

SIDE VIEW

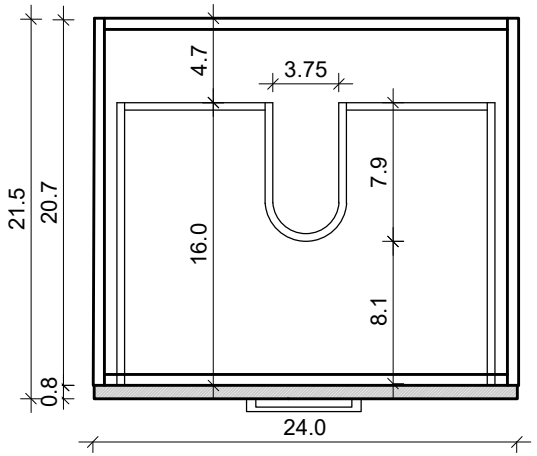

TOP VIEW

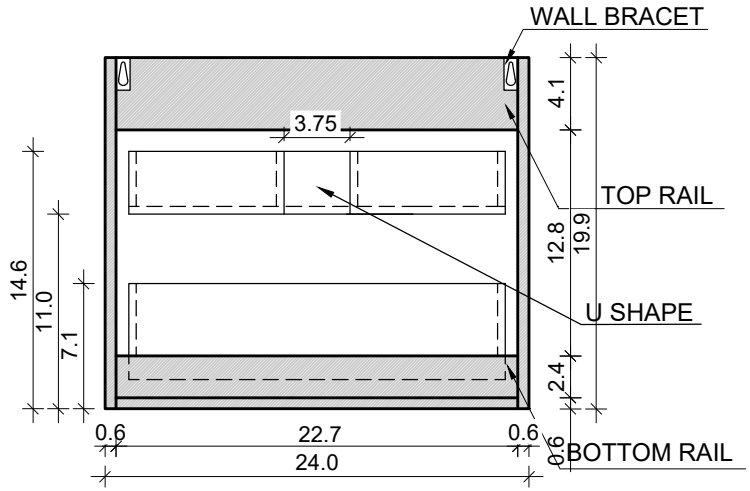

BACK VIEW