DAYTONA 2 STONE 30-02

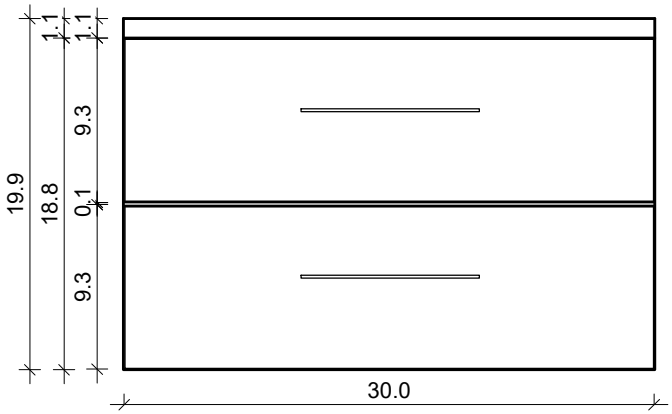

FRONT VIEW

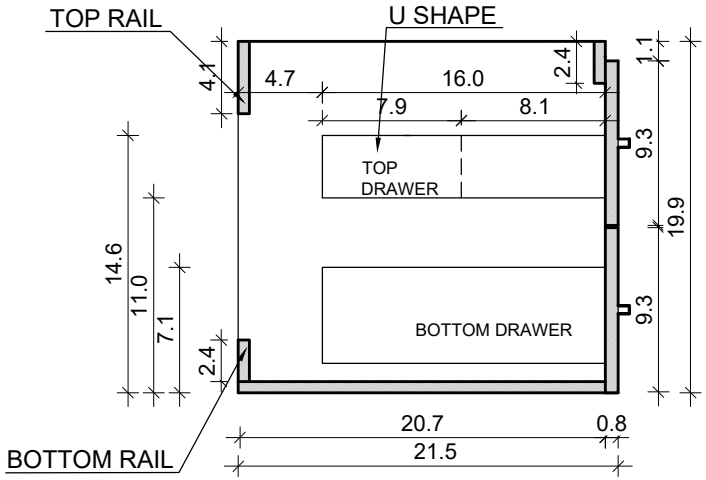

SIDE VIEW

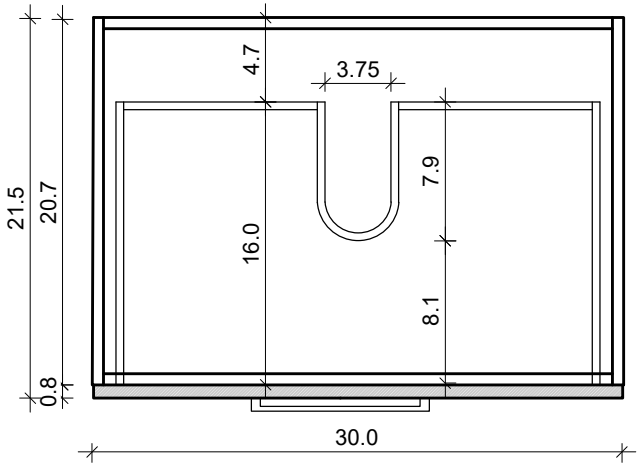

TOP VIEW

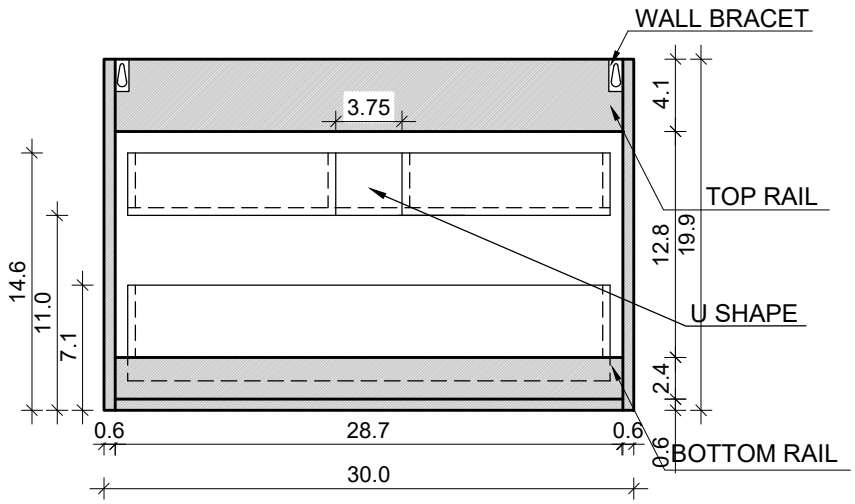

BACK VIEW