DAYTONA 2 STONE 36-02

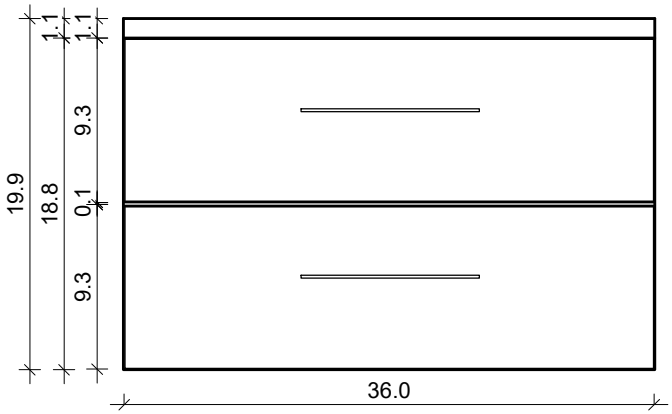

FRONT VIEW

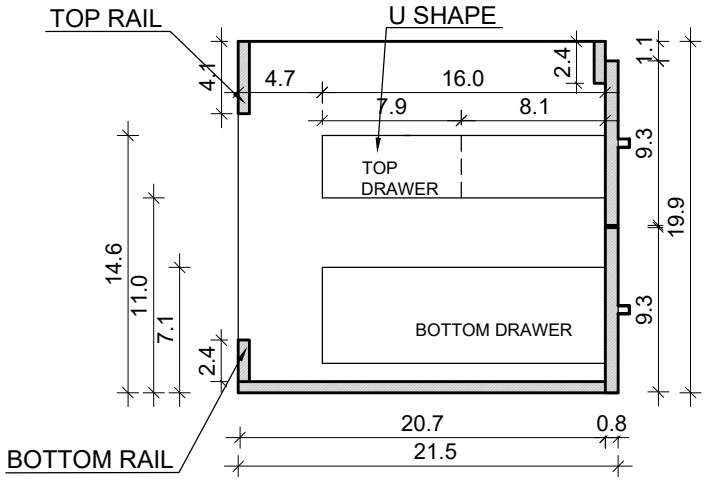

SIDE VIEW

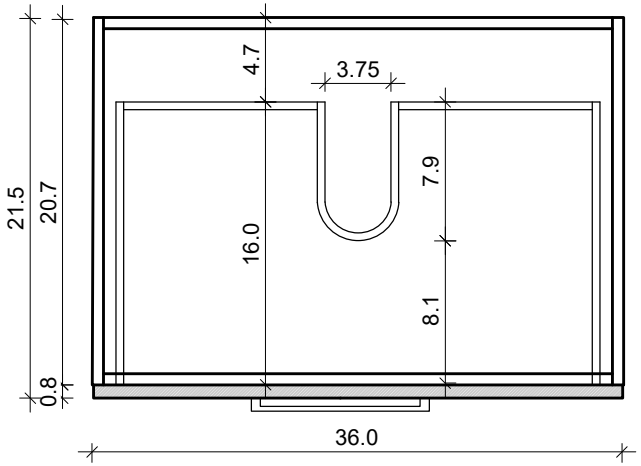

TOP VIEW

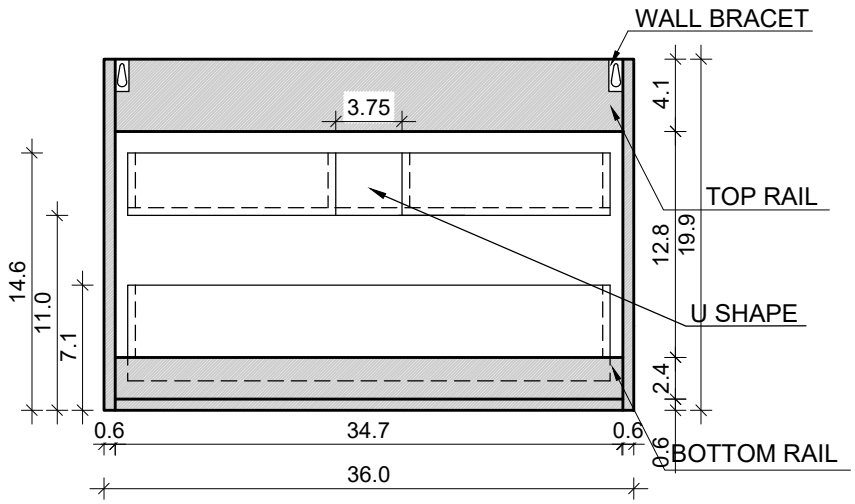

BACK VIEW