DAYTONA 2 FOR 24X14 TOPS 24-02

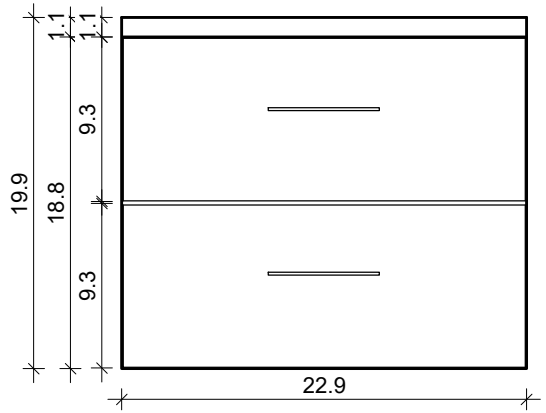

FRONT VIEW

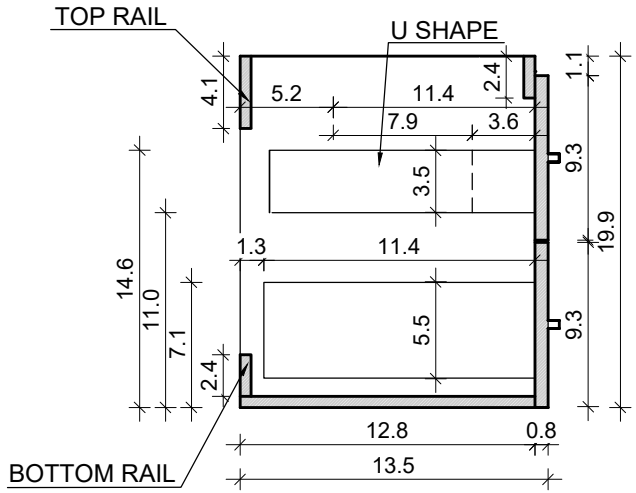

SIDE VIEW

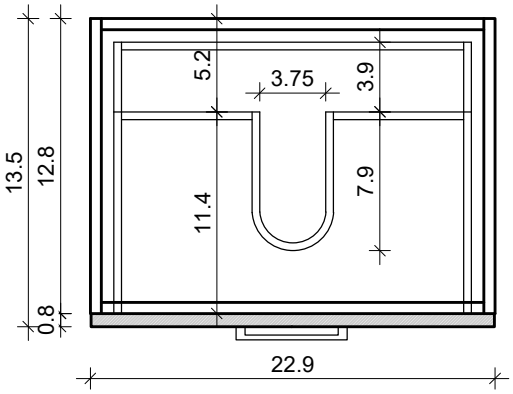

TOP VIEW

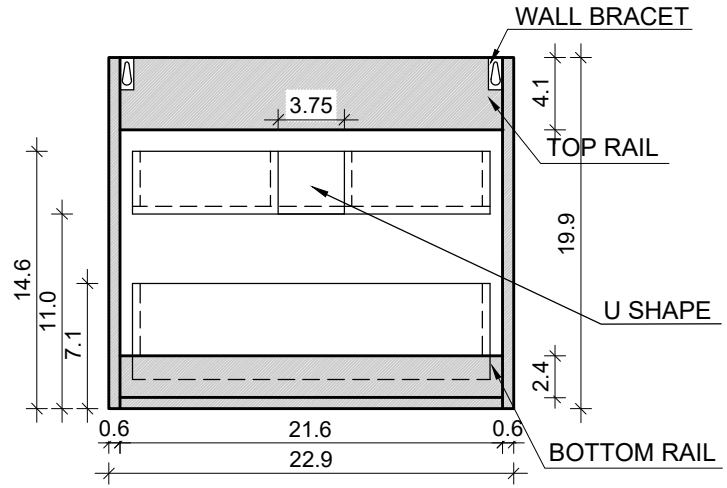

BACK VIEW