# DAYTONA 2 FOR NEW SLIM LINE 24-20

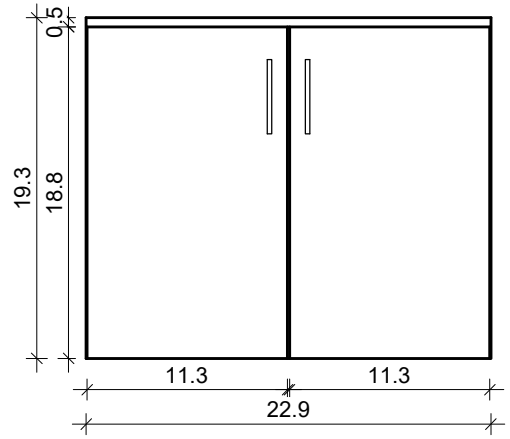


FRONT VIEW

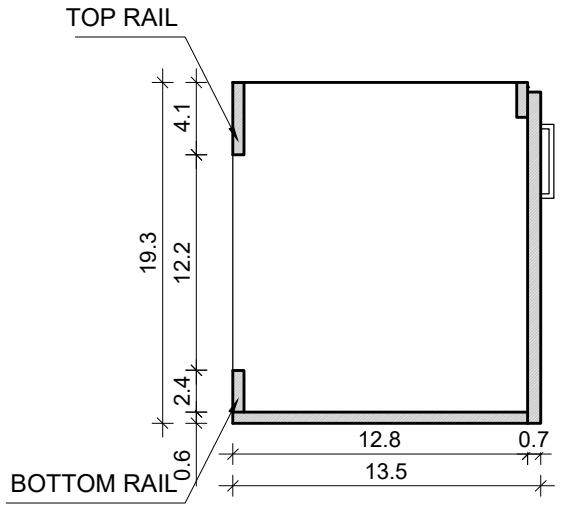


SIDE VIEW

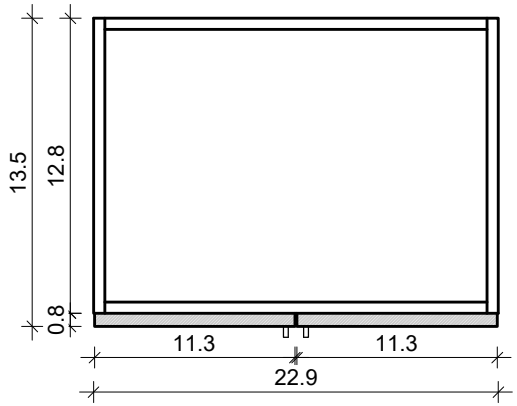


TOP VIEW

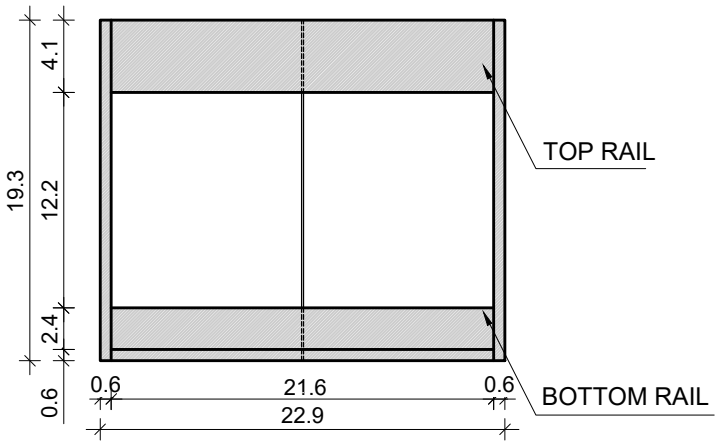


BACK VIEW