DAYTONA 2 FOR TRIBECA 17-20

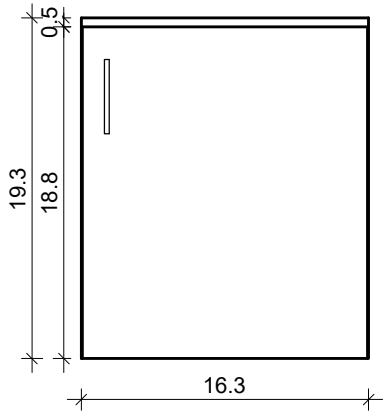

FRONT VIEW

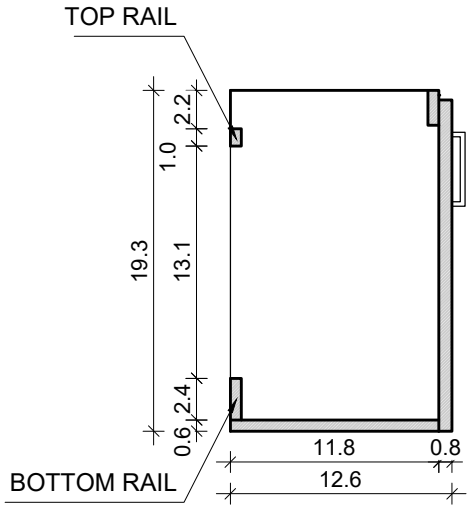

SIDE VIEW

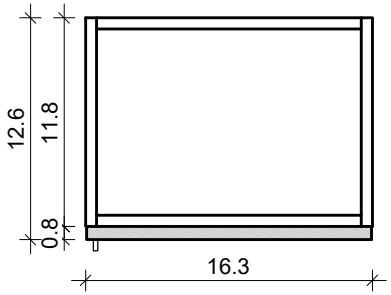

TOP VIEW

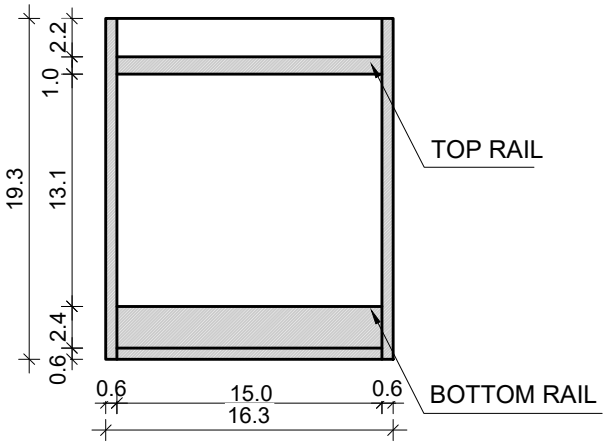

BACK VIEW