# DAYTONA 3 FOR STONE 36-02

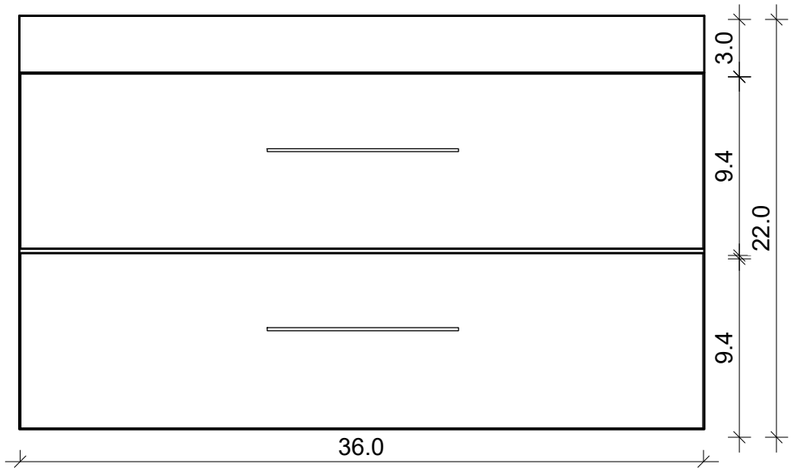


FRONT VIEW

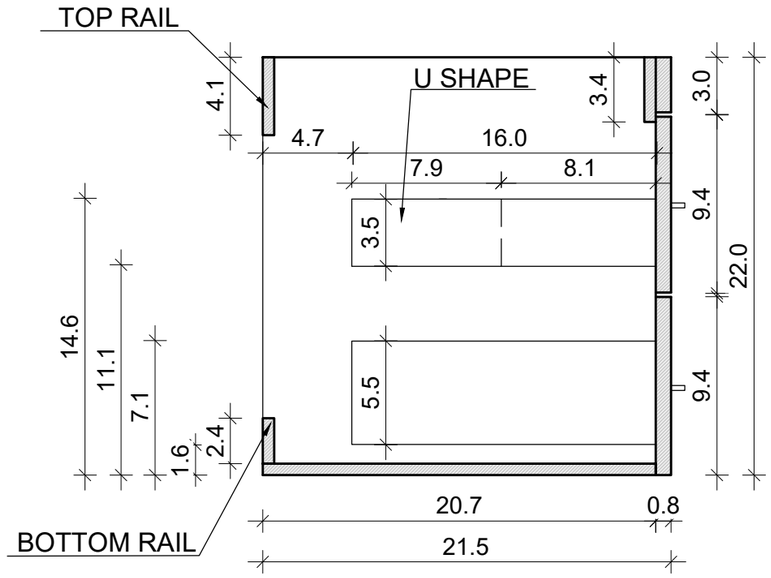


SIDE VIEW

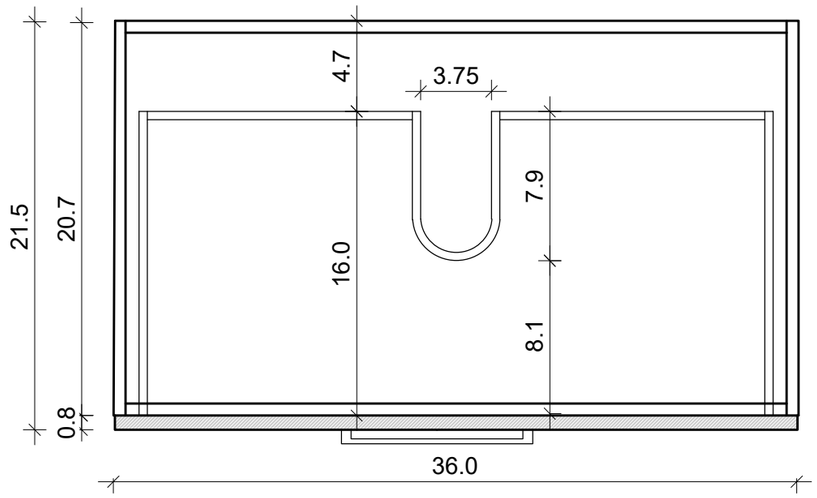


TOP VIEW

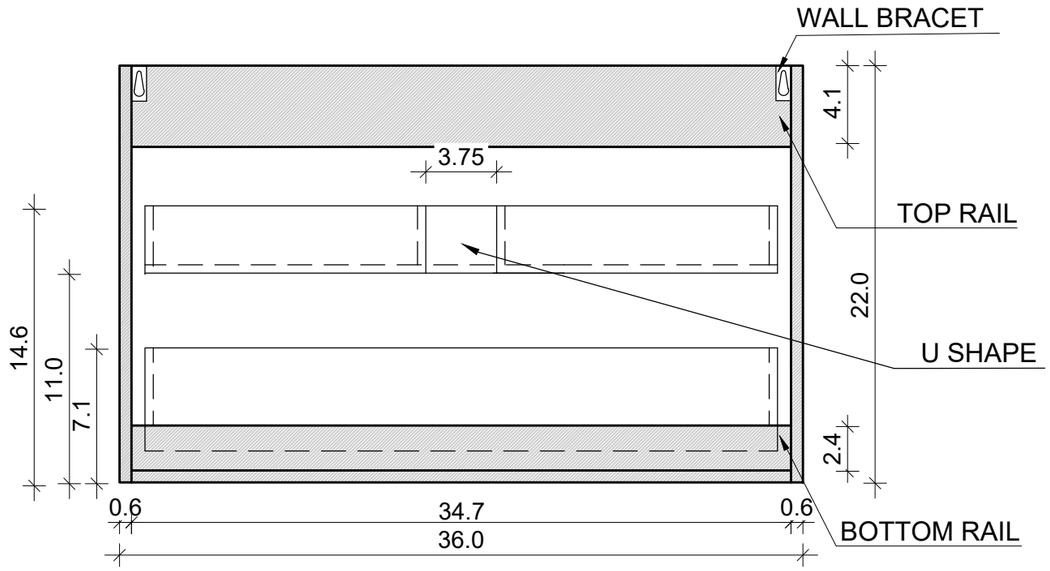


BACK VIEW